Hoist Installation Space

Advantages:

➤The unit takes up minimal space in the tower.

➤Dimensions are 38 inches by 40 inches and 12.5 feet tall.
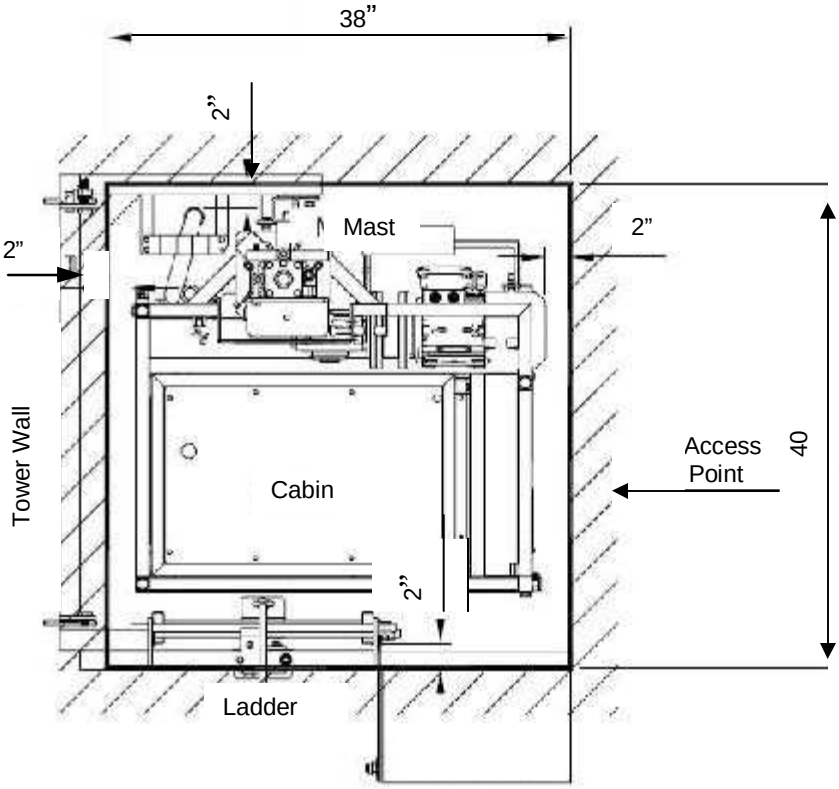
➤Cabin has no internal mechanical equipment taking up useful space inside the cabin.